THE DRAWING ON THIS PRINT AND INFORMATION THEREWITH ARE PROPRIETARY TO VARITRONIX AND SHALL NOT BE USED IN WHOLE OR IN PART WITHOUT WRITTEN PERMISSION OF VARITRONIX.

ISSUE	AMENDMENT	DATE
1 8	UPDATE DIMENSIONS & DRAWING	08.02.31
2 1	UPDATE STORAGE TEMPERTURE	08.04.08
3 1	UPDATE TABLE INFO	08.04.17
4 1	UPDATE TABLE INFO	08.07.15

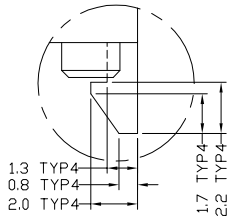

DETAIL A

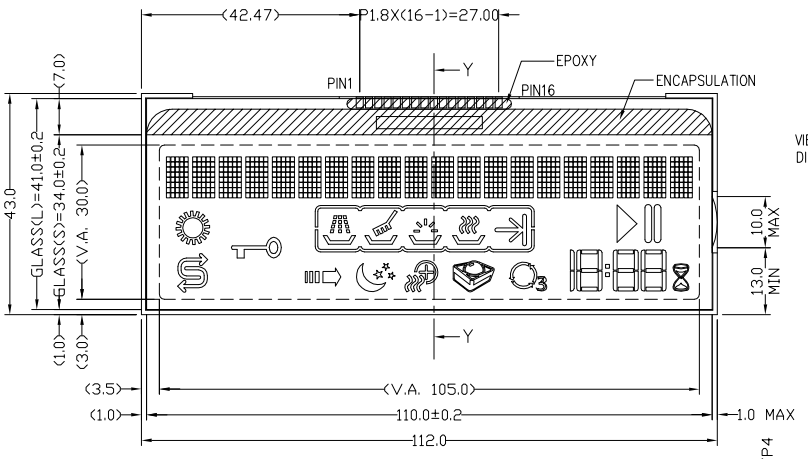

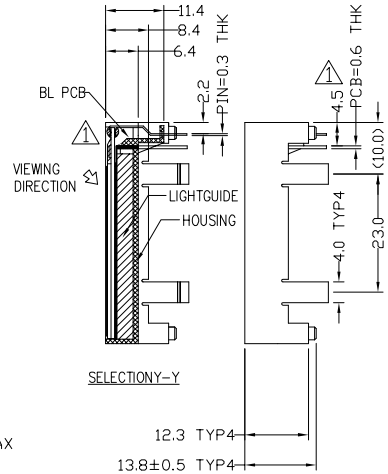

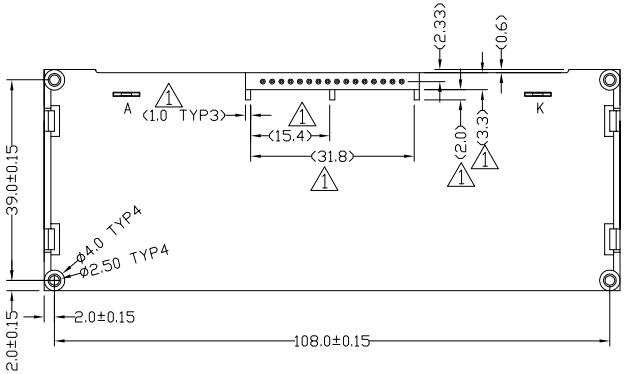

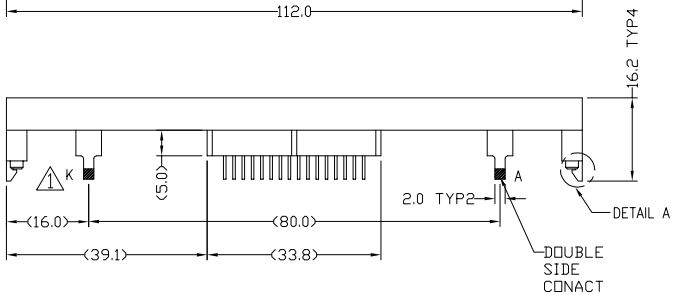

PIN ASSIGNMENT

PIN	1	2	3	4	5	6	7	8	9	10	11	12	13	14	15	16
SYMBOL	$\overline{RES}$	RS	$\overline{CS}$	R/$\overline{W}$	E	DB4	DB5	DB6	DB7	VSS	VDD	VIN	VOUT	CAP1+	CAP1-	V0

2 3

DISPLAY TYPE	ESTN, -VE, BLUE, TRANSMISSIVE		
DISPLAY RESOLUTION	20 CHAR (5X8 DOTS) X 1 LINE + ICONS		
VIEWING ANGLE	12 O' CLOCK		
LCD DUTY & BIAS RATIO	1/17 DUTY, 1/5 BIAS		
LCD CONTROLLER	ST7036 (COG)		
LOGIC VOLTAGE	5V		
OPERATING TEMPERATURE	0℃ to +85℃		
STORAGE TEMPERTURE	-30℃ to +90℃		
BACKLIGHT	TYPE	LED02	
	COLOR	AMBER	
	WAVELENGTH	588~595nm	
	4 DRIVING VOLTAGE	~4.0V(@70mA)	
	LUMINANCE(CD/M2) (ON THE BACKLIGHT SURFACE)	MIN.	140
		TYP.	175
		MAX.	--
REMARK			

NOTES:
1. ◇ : SPECIAL CHARACTERISTIC
2. + : SAFETY CHARACTERISTIC
3. ▽ : CRITICAL DIMENSION
4. (..) : REFERENCE DIMENSION

VARITRONIX

VARITRONIX LIMITED

TITLE: LCM MODULE SPECIFICATION

PROJECT NO: COG-VLIT1329

CUSTOMER REF: IN / A

TOLERANCE UNLESS OTHERWISE SPECIFIED: X.X ±0.3, X.XX ±0.1, ANGULAR: ± 1°

DIMENSIONS IN MM

MATERIAL: N/A | FINISH: N/A

SCALE: DO NOT ON SCALE | OVERALL THK: N/A

THIRD ANGLE PROJECTION

	NAME	SIGN	DATE
DRAWN:	ZL XIE		08.07.15
CHECKED:	YP JIN		
APPROVED:	YL LAW		

ITEM NO.: COG-VLIT1329-02

DESCRIPTION: COG-VLIT1329

FILE NO: COG-VLIT1329-02 R4.DWG | REV: 4

SHEET 1 OF 1